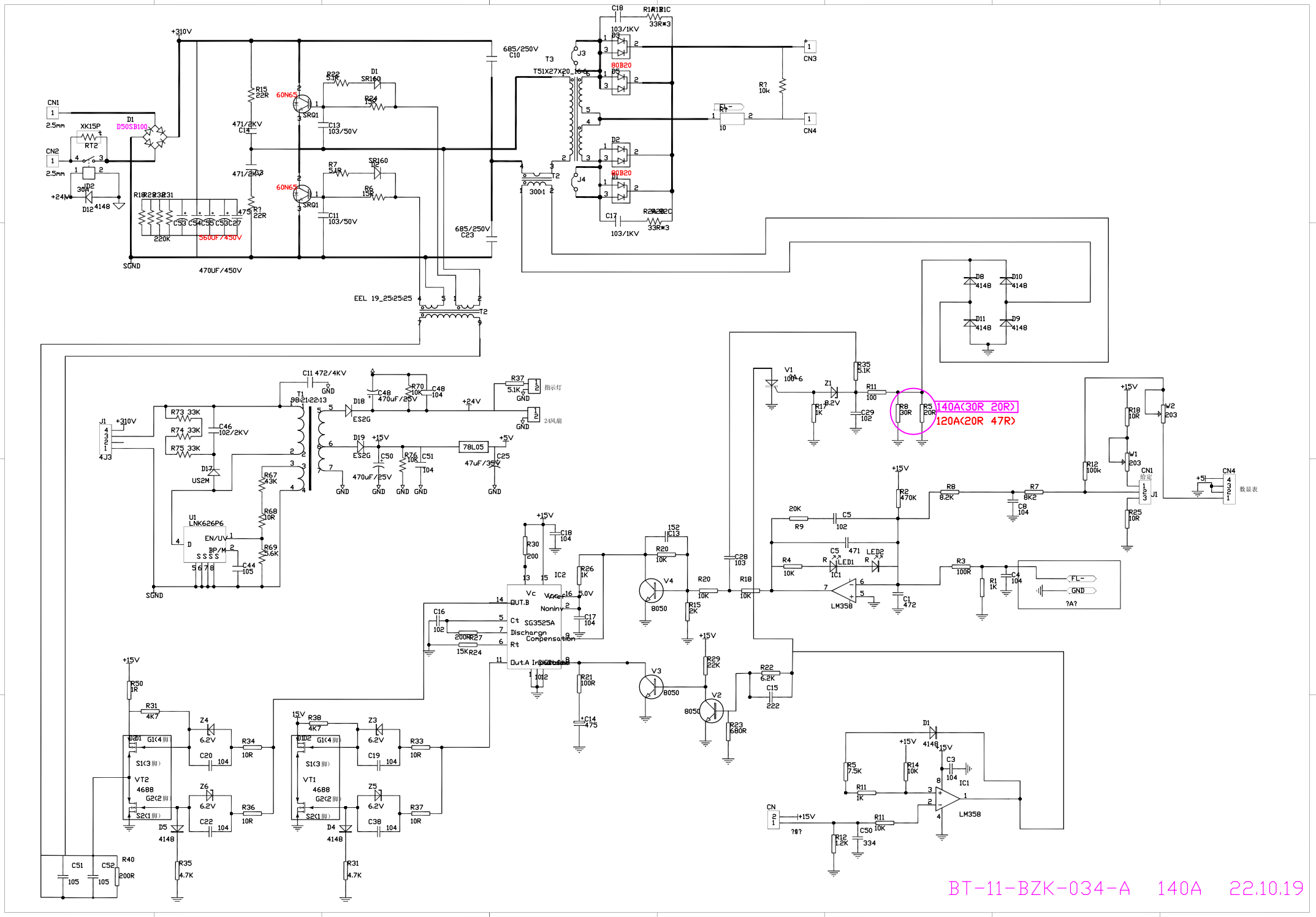
+310V
CN1
2.5mm
XK15P
RT2
CN2
2.5mm
+24V
JD2
30A
D12
4148
D1
D50SB100
R15
22R
471/2KV
C14
471/2KV
C13
R22
5.1K
D1
SR160
R24
15K
60N65
SRQ1
C13
103/50V
R7
5.1K
SR160
R6
15K
60N65
SRQ1
C11
103/50V
R18
R22
R30
R31
220K
C53
C54
C55
C56
C27
5600UF/450V
R?
22R
SGND
470UF/450V
685/250V
C10
T3
T51X27X20_16_6
J3
J4
T2
300:1
C18
103/1KV
R14
R13
R12
33R*3
80B20
D3
D5
D2
D4
C17
103/1KV
R21
R20
R19
33R*3
CN3
CN4
R?
10k
FL-
R?
10
685/250V
C23
EEL 19_25:25:25
T2
D8
4148
D10
4148
D11
4148
D9
4148
C11 472/4KV
GND
T1
98:21:22:13
D18
ES2G
C48
470uF/25V
R70
10K
C48
104
+24V
R37
5.1K
指示灯
24风扇
J1
+310V
4J3
R73 33K
R74 33K
R75 33K
C46
102/2KV
D17
US2M
R67
43K
R68
10R
R69
5.6K
U1
LNK626P6
EN/UV
BP/M
C44
105
SGND
D19
ES2G
+15V
C50
470uF/25V
R76
10K
C51
104
78L05
+5V
C25
47uF/35V
GND
GND
GND
GND
GND
V1
10A-6
Z1
6.2V
R35
5.1K
R11
100
R17
1K
C29
102
R8
30R
R5
20R
140A(30R 20R)
120A(20R 47R)
+15V
R18
10R
W2
203
W1
203
R12
100k
CN1
给定
J1
CN4
数显表
+5
R25
10R
+15V
R2
470K
R8
8.2K
R7
8K2
C8
104
20K
R9
C5
102
C5
471
LED2
R4
10K
LED1
IC1
LM358
C1
472
R3
100R
R1
1K
C4
104
FL-
GND
?A?
+15V
R30
200
C18
104
IC2
SG3525A
Vc
OUT.B
Ct
Discharge
Rt
Out.A
Noninv
Compensation
Vref
5.0V
C16
102
200R R27
15K R24
R26
1K
C17
104
152
C13
R20
10K
V4
8050
R20
10K
R15
2K
R18
10K
C28
103
R21
100R
C14
475
V3
8050
+15V
R29
22K
V2
8050
R23
680R
R22
6.2K
C15
222
+15V
R50
1K
R31
4K7
Z4
6.2V
R34
10R
C20
104
VT2
4688
S1(3脚)
G1(4脚)
G2(2脚)
S2(1脚)
Z6
6.2V
R36
10R
C22
104
D5
4148
R35
4.7K
15V
R38
4K7
Z3
6.2V
R33
10R
C19
104
VT1
4688
Z5
6.2V
R37
10R
C38
104
D4
4148
R31
4.7K
C51
105
C52
105
R40
200R
+15V
D1
4148
R5
7.5K
R14
10K
C3
104
IC1
LM358
R11
1K
CN
?8?
R11
10K
R12
1.2K
C50
334
BT-11-BZK-034-A 140A 22.10.19